MODEL
CBEALHN-BCW/S

3:1 pilot ratio, standard capacity counterbalance valve
CAPACITY: 120 L/min. | **CAVITY:** T-2A

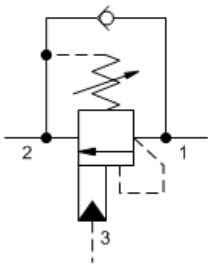

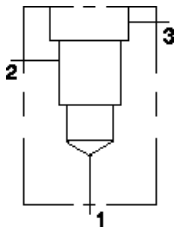

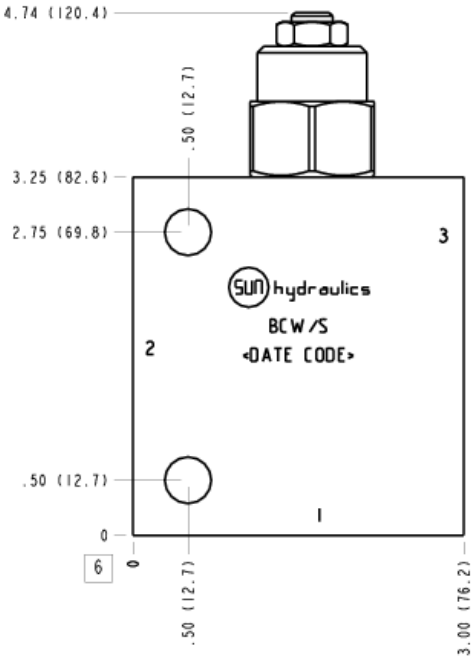

CARTRIDGE CONFIGURATION

L	Control	Standard Screw Adjustment
H	Functional Setting Range	1000 - 4000 psi w/25 psi Check (70 - 280 bar w/ 1,7 bar Check), 3000 psi (210 bar) Standard Setting
N	Seal Material	Buna-N
(none)	Material/Coating	

MANIFOLD CONFIGURATION

/S	Modifier	65-45-12 Ductile Iron, Buna-N, Dewatering Oil

PORT HEADINGS AND SIZES

Modifiers	Ports
BCW, /10, /11, /S, /S3	Ports 1 & 2: 3/4" BSPP; Port 3: 1/4" BSPP;

NOTES

Important: Carefully consider the maximum system pressure. The pressure rating of the manifold is dependent on the manifold material, with the port type/size a secondary consideration. Manifolds constructed of aluminum are not rated for pressures higher than 3000 psi (210 bar), regardless of the port type/size specified.

Counterbalance valves with pilot assist are meant to control an overrunning load. The check valve allows free flow from the directional valve (port 2) to the load (port 1) while a direct-acting, pilot-assisted relief valve controls flow from port 1 to port 2. Pilot assist at port 3 lowers the effective setting of the relief valve at a rate determined by the pilot ratio.

Other names for this valve include motion control valve and over-center valve.

CARTRIDGE TECHNICAL DATA

Cavity	T-2A
Series	2
Capacity	120 L/min.
Pilot Ratio	3:1
Maximum Recommended Load Pressure at Maximum Setting	215 bar
Maximum Setting	280 bar
Pilot Configuration	Bleed through
Factory Pressure Settings Established at	30 cc/min.
Maximum Valve Leakage at Reseat	0,3 cc/min.
Adjustment - No. of CCW Turns from Min. to Max. Setting	3.75
Operating Characteristic	Standard
Reseat	>85% of setting
Valve Hex Size	28,6 mm
Valve Installation Torque	61 - 68 Nm
Adjustment Screw Internal Hex Size	4 mm
Locknut Hex Size	15 mm
Locknut Torque	9 - 10 Nm

Seal kit - Cartridge	Buna: 990-202-007
Seal kit - Cartridge	EPDM: 990-202-014
Seal kit - Cartridge	Polyurethane: 990-002-002
Seal kit - Cartridge	Viton: 990-202-006
Model Weight	0.29 kg.

MANIFOLD TECHNICAL DATA

Body Type	Line mount
Interface	None
Body Features	Ninety degree
Mounting Hole Diameter	10,7 mm
Mounting Hole Depth	Through
Mounting Hole Quantity	2
Open Cavities	1
Cavity	T-2A
Port Size	3/4" BSPP
Model Weight	1.26 kg.

CARTRIDGE TECHNICAL FEATURES

- Counterbalance valves should be set at least 1.3 times the maximum load induced pressure.
- Turn adjustment clockwise to decrease setting and release load.
- Full clockwise setting is less than 200 psi (14 bar).
- Backpressure at port 2 adds to the effective relief setting at a ratio of 1 plus the pilot ratio times the backpressure.
- Reseat exceeds 85% of set pressure when the valve is standard set. Settings lower than the standard set pressure may result in lower reseat percentages.
- Cartridges configured with EPDM seals are for use in systems with phosphate ester fluids. Exposure to petroleum based fluids, greases and lubricants will damage the seals.
- Sun counterbalance cartridges can be installed directly into a cavity machined in an actuator housing for added protection and improved stiffness in the circuit.
- Two check valve cracking pressures are available. Use the 25 psi (1,7 bar) check unless actuator cavitation is a concern.
- This valve does not have positive seals on the pilot section and will pass up to 2 in^3/min.@1000 psi (32 cc/min.@70 bar) between port 2 and port 3. This is a consideration in master-slave circuits and in the leak testing of valve-cylinder assemblies.
- All 3-port counterbalance, load control, and pilot-to-open check cartridges are physically interchangeable (i.e. same flow path, same cavity for a given frame size).
- Incorporates the Sun floating style construction to minimize the possibility of internal parts binding due to excessive installation torque and/or cavity/cartridge machining variations.

ASSEMBLY FACES

FACE GRID

Face 2

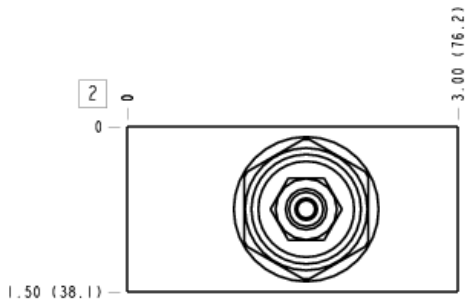

Face 5

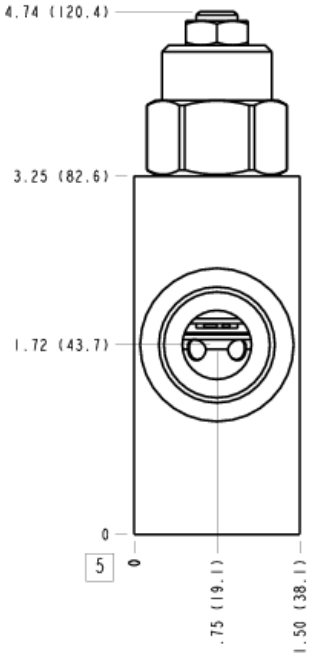

Face 6

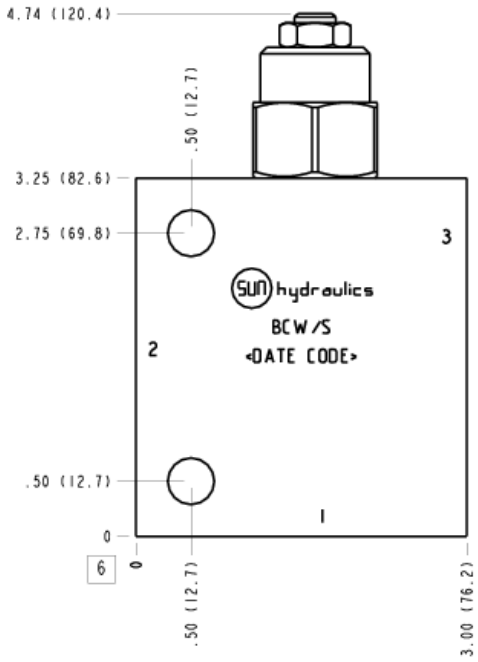
4.74 (120.4)
.50 (12.7)
3.25 (82.6)
2.75 (69.8)
3
sun hydraulics
BCW/S
<DATE CODE>
2
.50 (12.7)
1
0
6
0
.50 (12.7)
3.00 (76.2)

Face 7

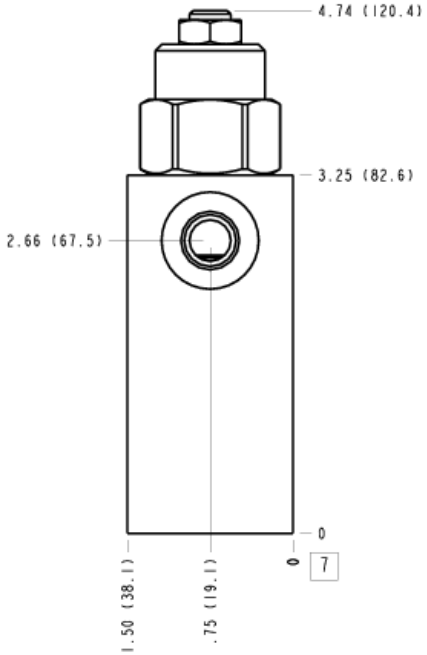
4.74 (120.4)
3.25 (82.6)
2.66 (67.5)
0
0
7
1.50 (38.1)
.75 (19.1)

Face 8

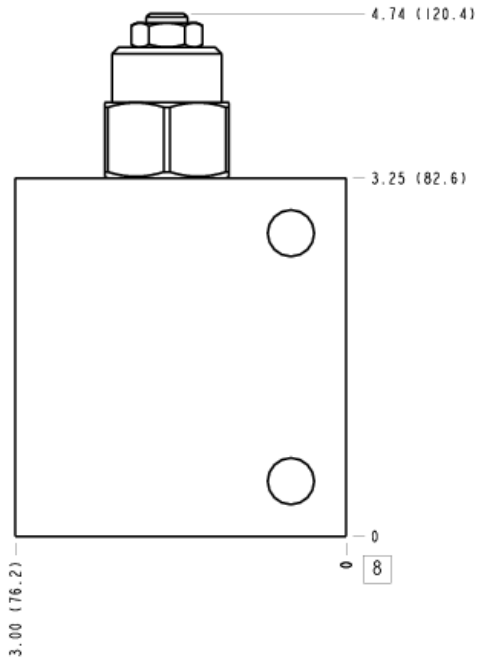

Face 10

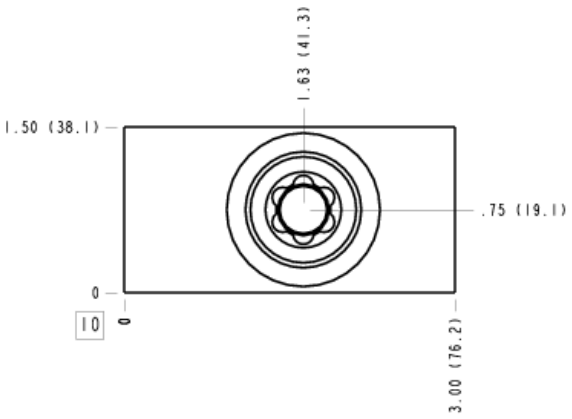

Copyright © 2002-2024 Sun Hydraulics. All rights reserved.